CATHODE RAY OSCILLOSCOPE

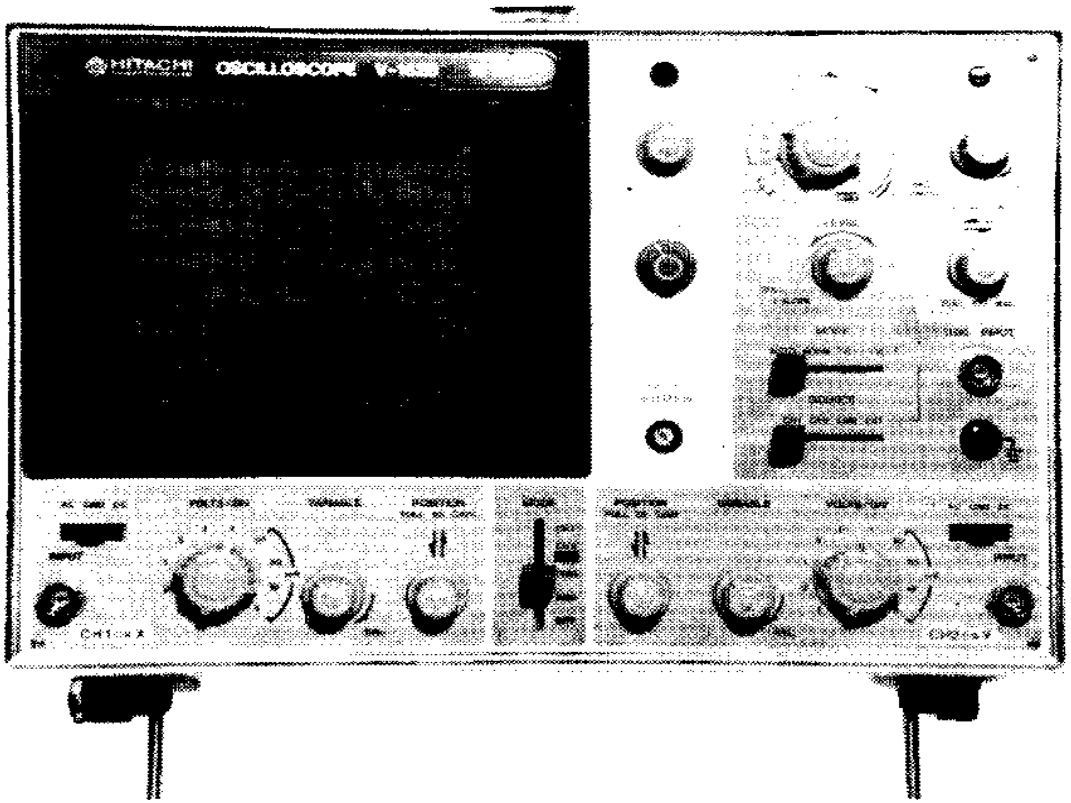

Functional Units

a) Electron Gun

b) Evacuated Tube

c) Deflecting System

d) Time Base

e) Trigger Circuit

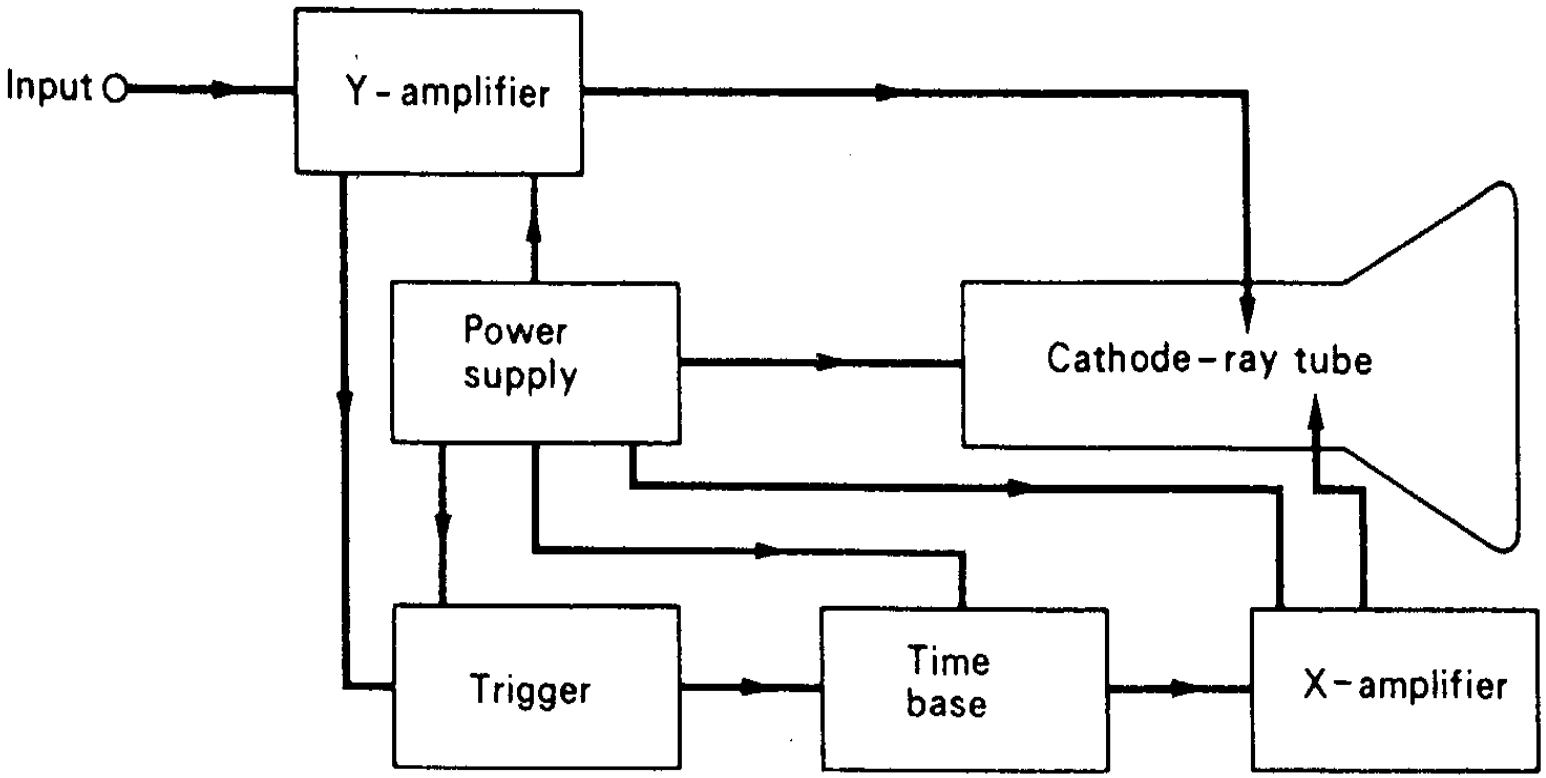
Input
Y - amplifier
Power supply
Cathode-ray tube
Trigger
Time base
X-amplifier

Electron Gun

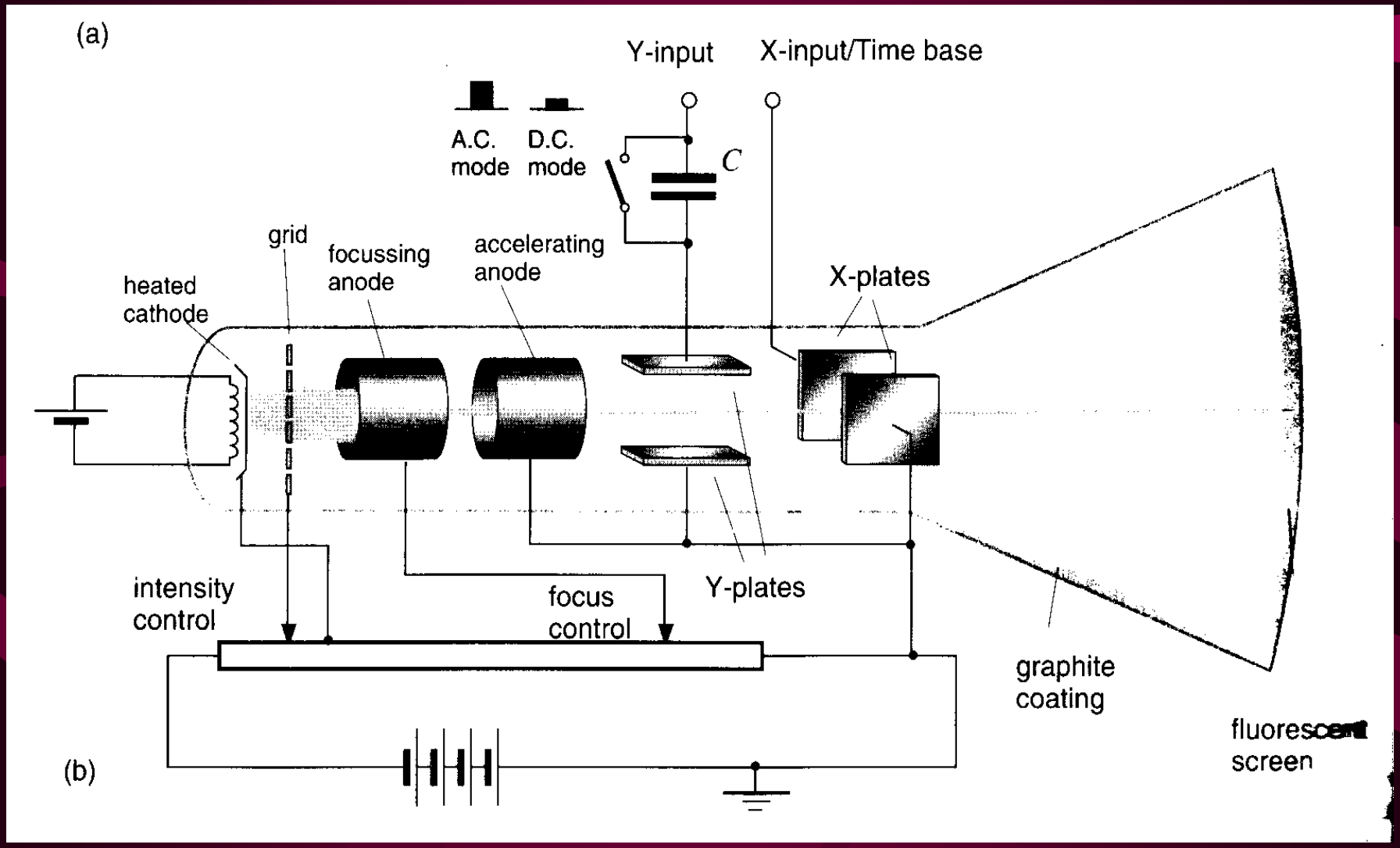

a) Heating Filament

b) Cathode

c) Grid

d) Electron lens

Return

Link to figure

Evacuated Tube

- Vacuum space
- Screen
- Graphite inner wall
- Shielded from electric and magnetic fields

Return

Link to figure

Deflecting System

- X-plates
- Y-plates
- X and Y Deflection Amplifiers
- *X-shift Control*
- *Y-shift Control*
- *Sensitivity Control*

Return

Link to figure

Time Base

- Sawtooth potential difference
- Time period control

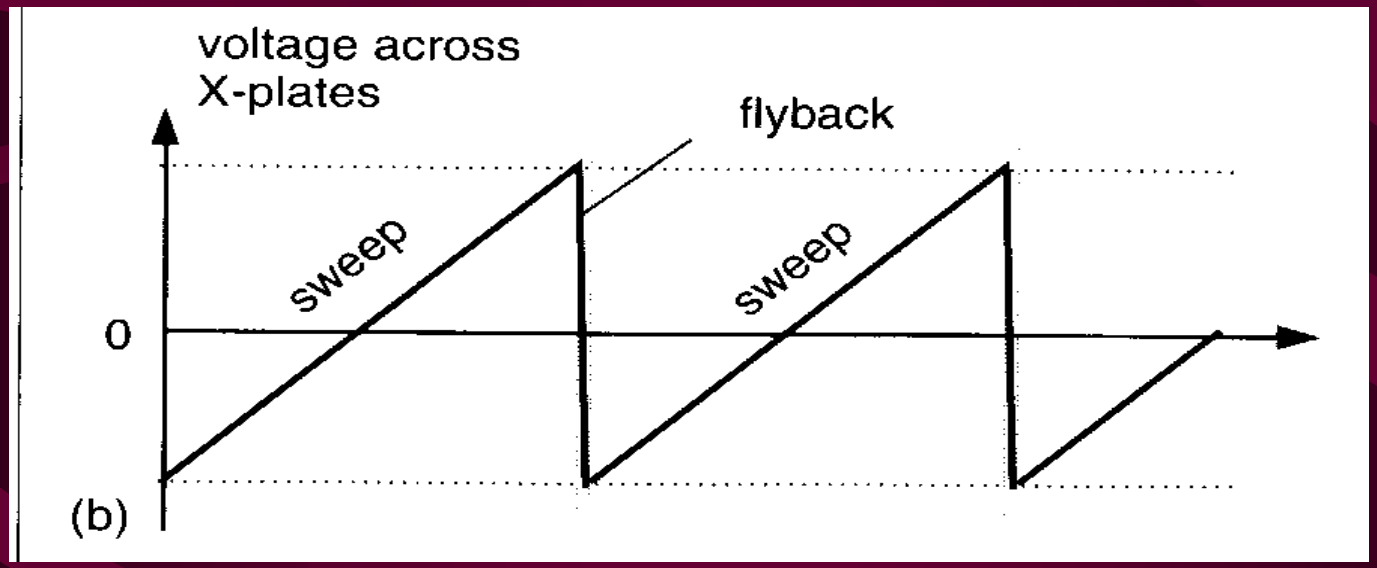

Return

Link to figure

Trigger Circuit

- Maintain a stable trace
- Trig level control
- Trigger time base
- automatic triggering

USES OF CRO

a) Voltmeter

b) Display of waveforms

c) Measurement of short time intervals

d) Measurement of frequency

e) Display of phase relationship

f) Comparison of frequencies

Voltmeter

- Calibration
- D.C. voltmeter
- A.C. voltmeter
- Advantages over moving-coil voltmeters

Return

Display of Waveforms

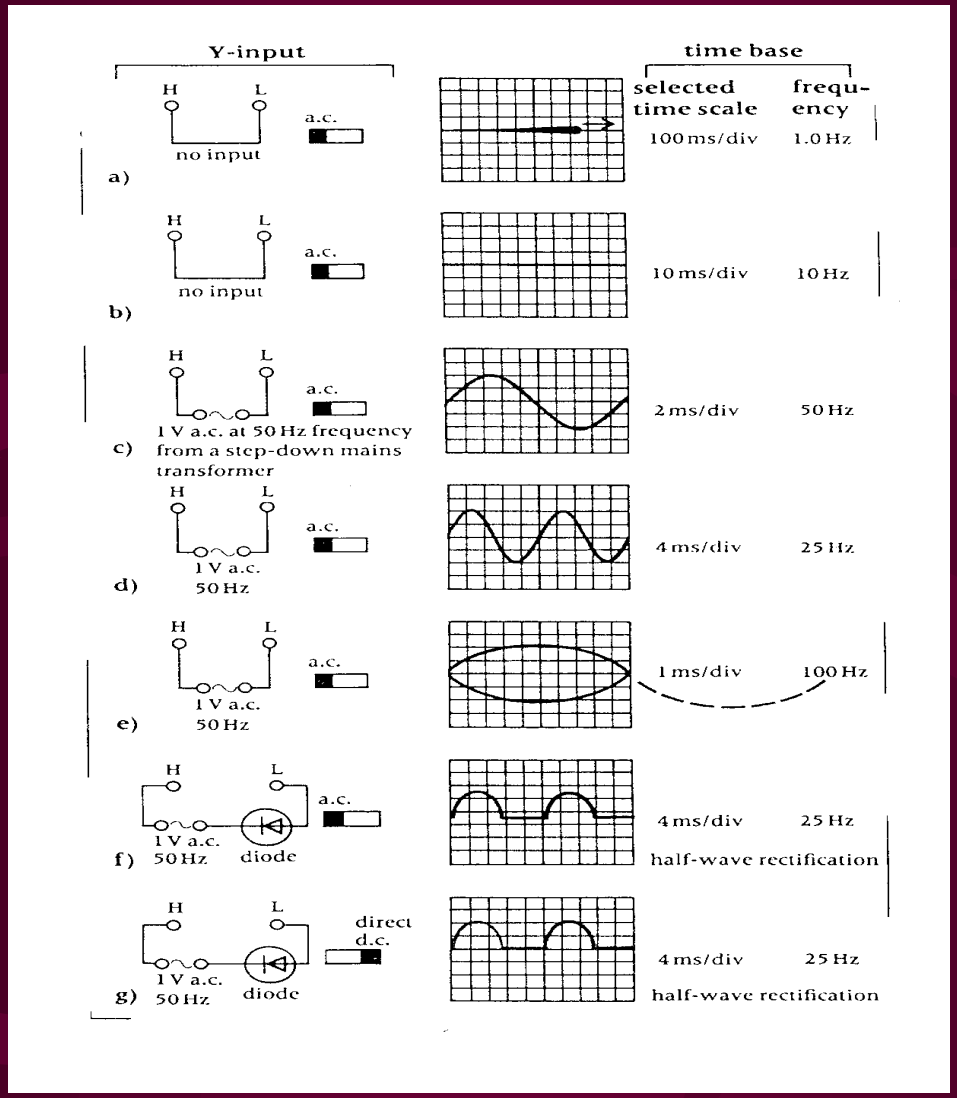

Measurement of Short Time Intervals

- Calibrate for the time base
- Measure a very small time interval, e.g. measurement of sound speed in a metal rod

Return

Measurement of Frequency

- Signal applied to Y-plates
- ‘Lock’ the trace
- Choose a suitable time base
- Determine the period, T
- Calculate the frequency

Return

Display of Phase Relationships

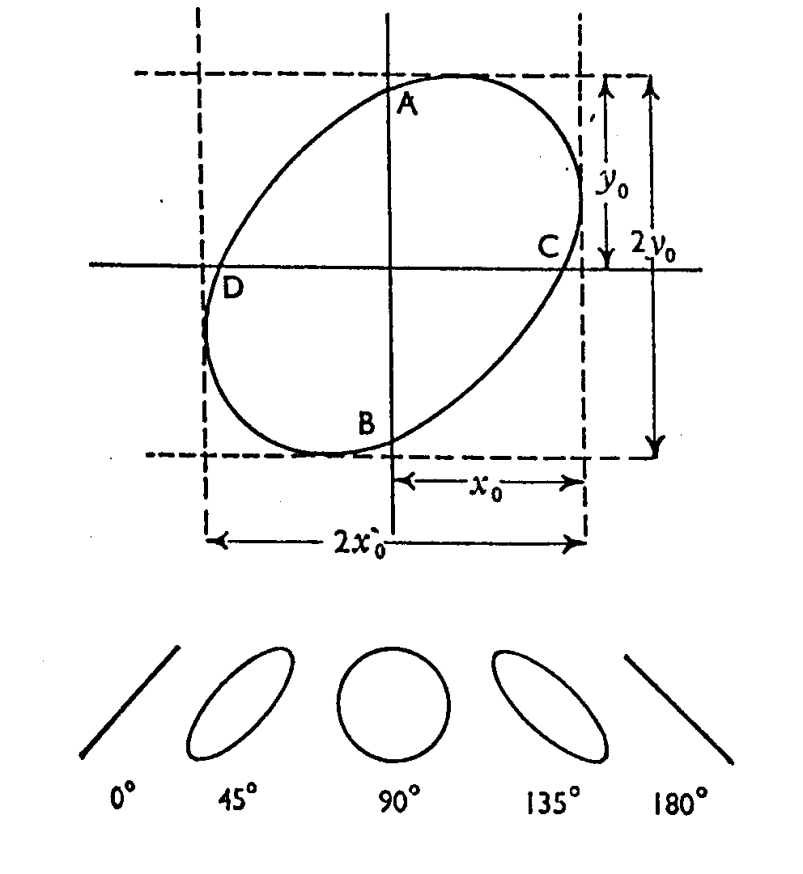

Computer Simulation

Return

Comparison of Frequencies

- Lissajous' figures
- Frequency ratio

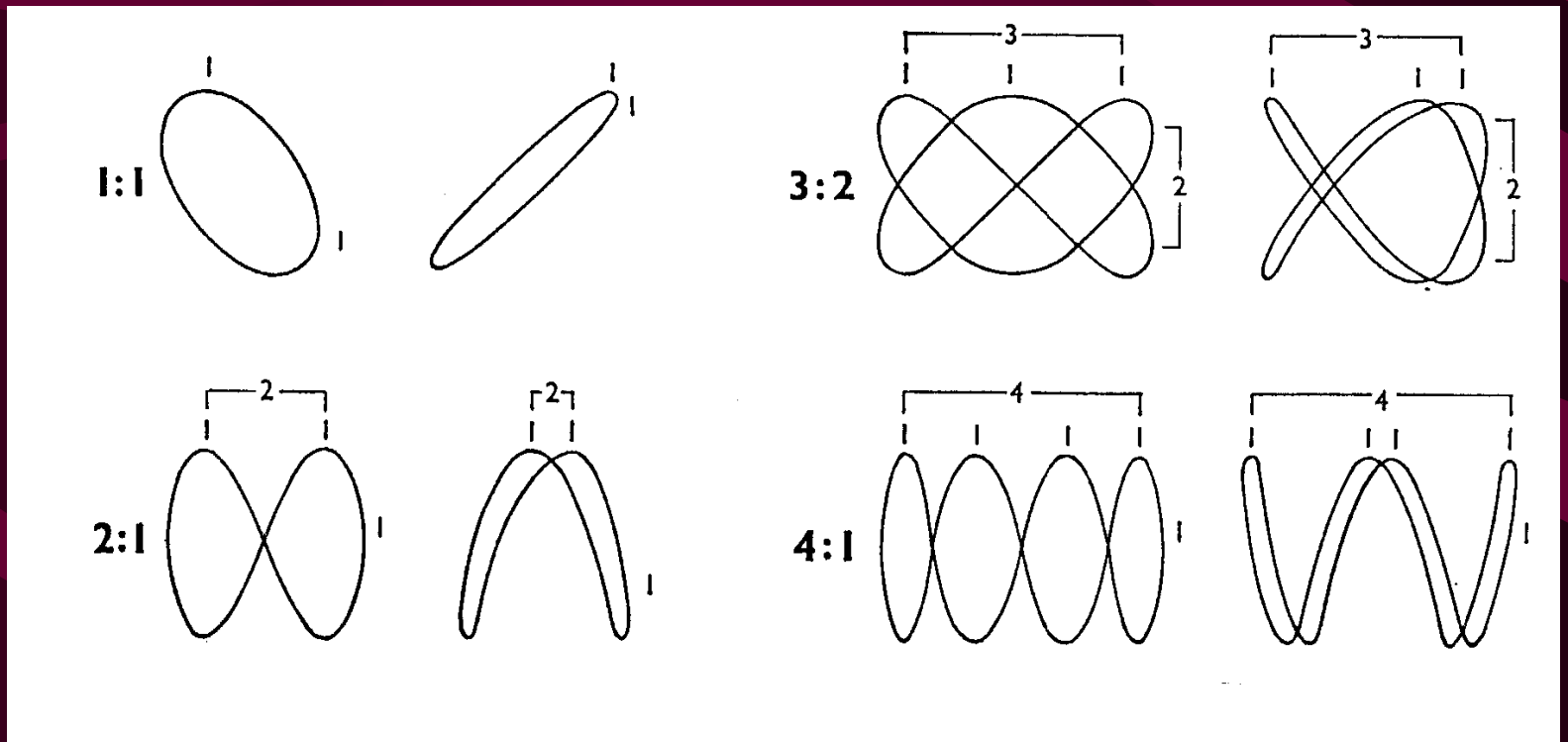

FUNCTION GENERATOR

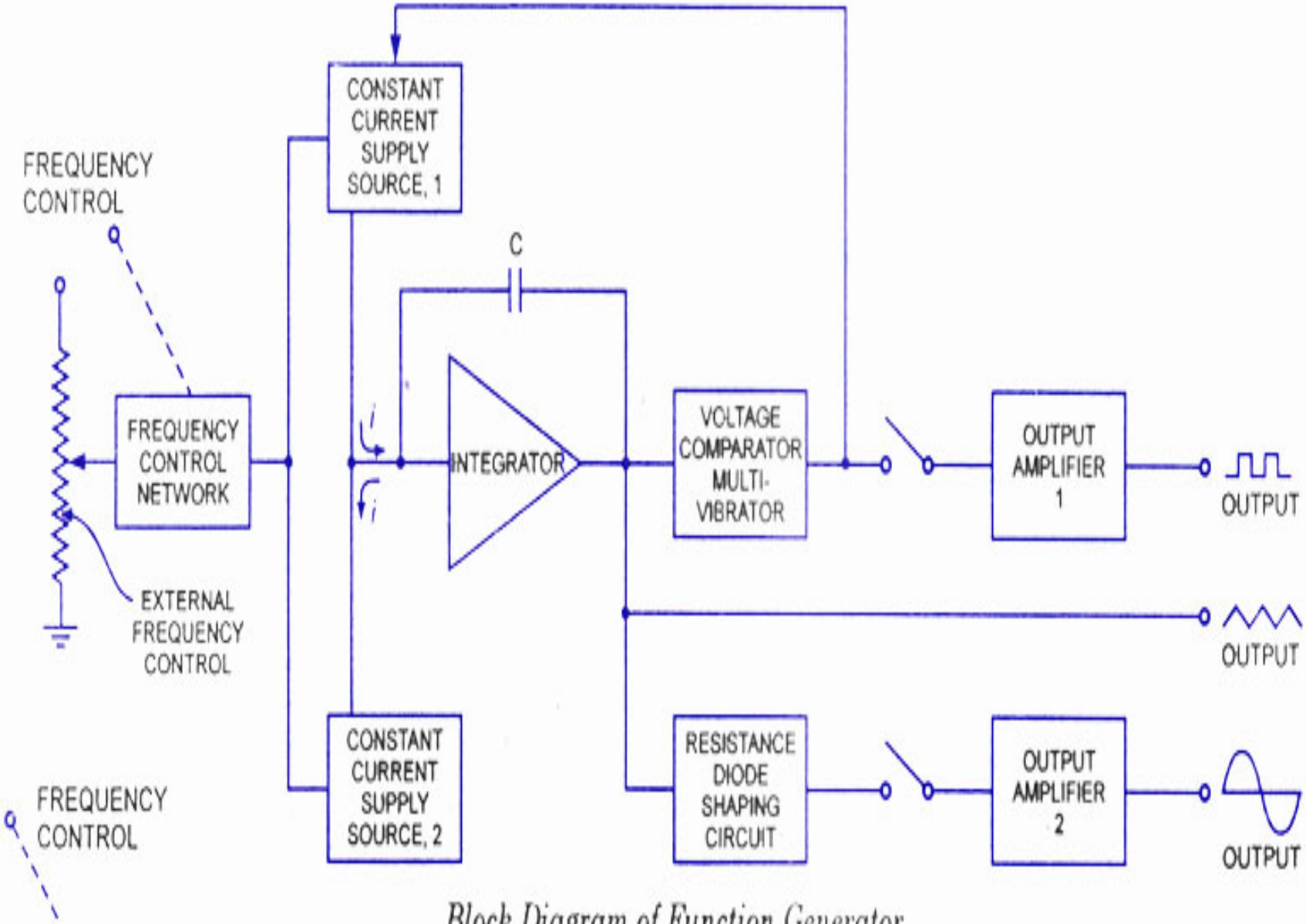

Block Diagram of Function Generator